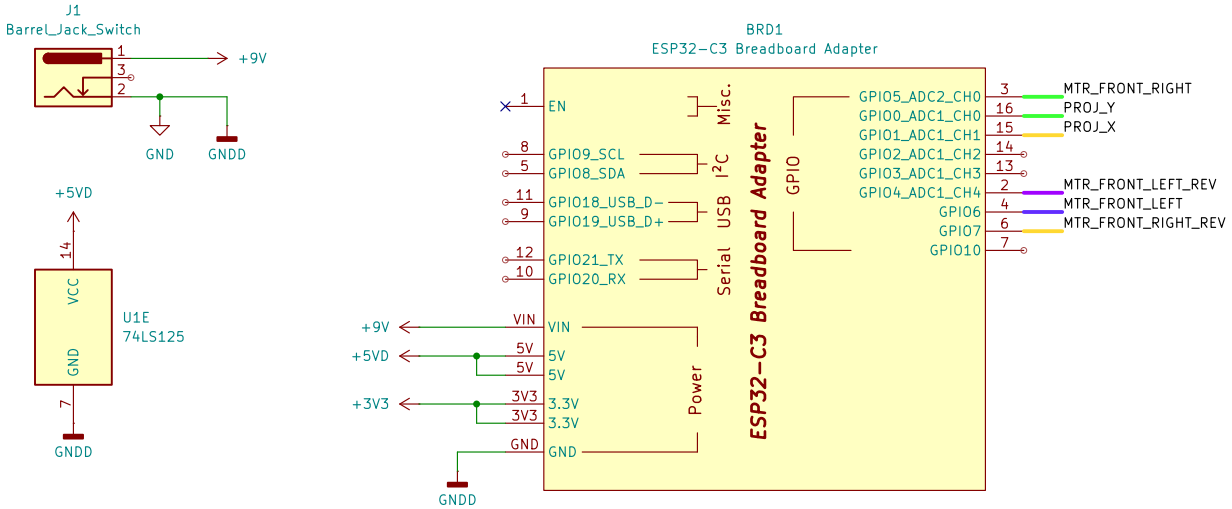

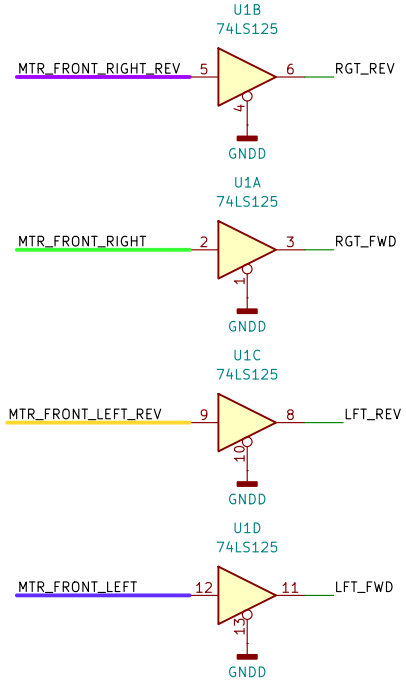

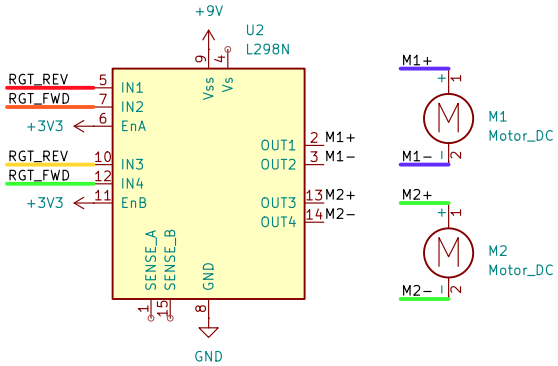

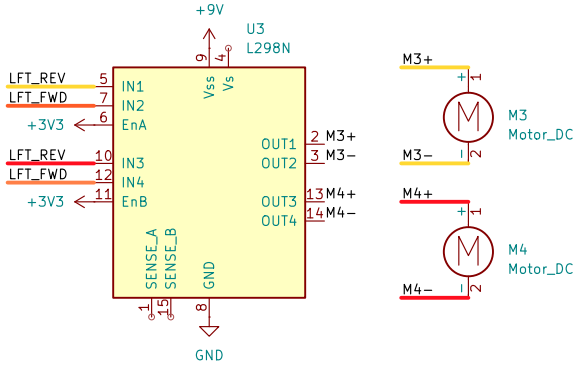

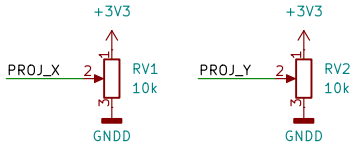

Sheet: /
File: ESP32-C3-RC.kicad_sch

Title: RC Model Car

Size: USLetter	Date: 2025-01-01	**Rev: 2.0.1**
KiCad E.D.A. 8.0.4		Id: 1/1