ByteRider

Release 06-2025

Alexander B

Jul 01, 2025

CONTENTS

1 INTRODUCTION **3**

2 HOW DOES IT WORK? **5**

3 WORK-IN-PROGRESS WALK THROUGH **7**

3.1 Finished Work 7

3.2 Chassis 7

3.3 Wiring 7

3.4 Motor Wires Harness 7

Add your content using `reStructuredText` syntax. See the reStructuredText documentation for details.

CHAPTER

ONE

INTRODUCTION

CHAPTER

TWO

HOW DOES IT WORK?

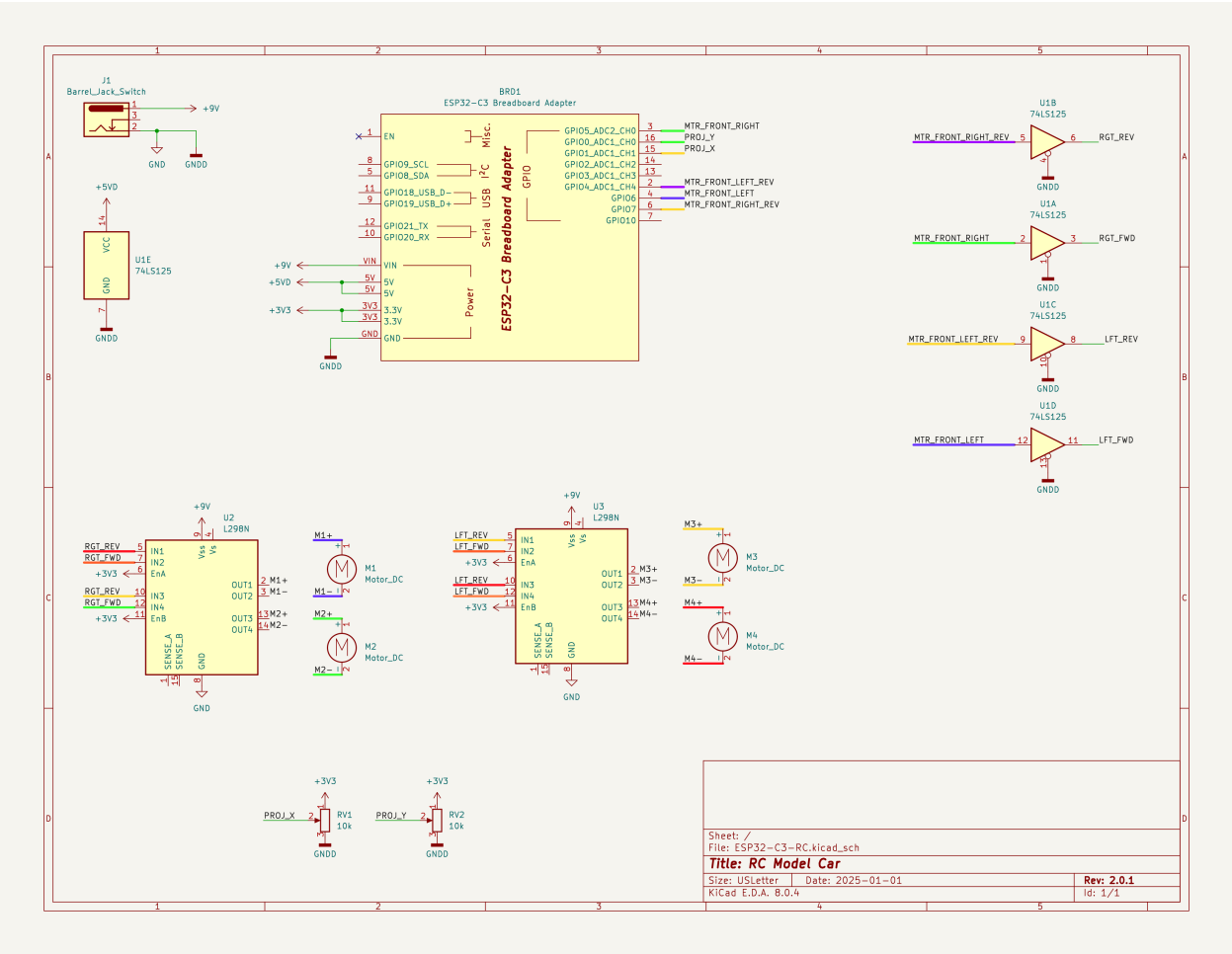

CHAPTER

THREE

WORK-IN-PROGRESS WALK THROUGH

3.1 Finished Work

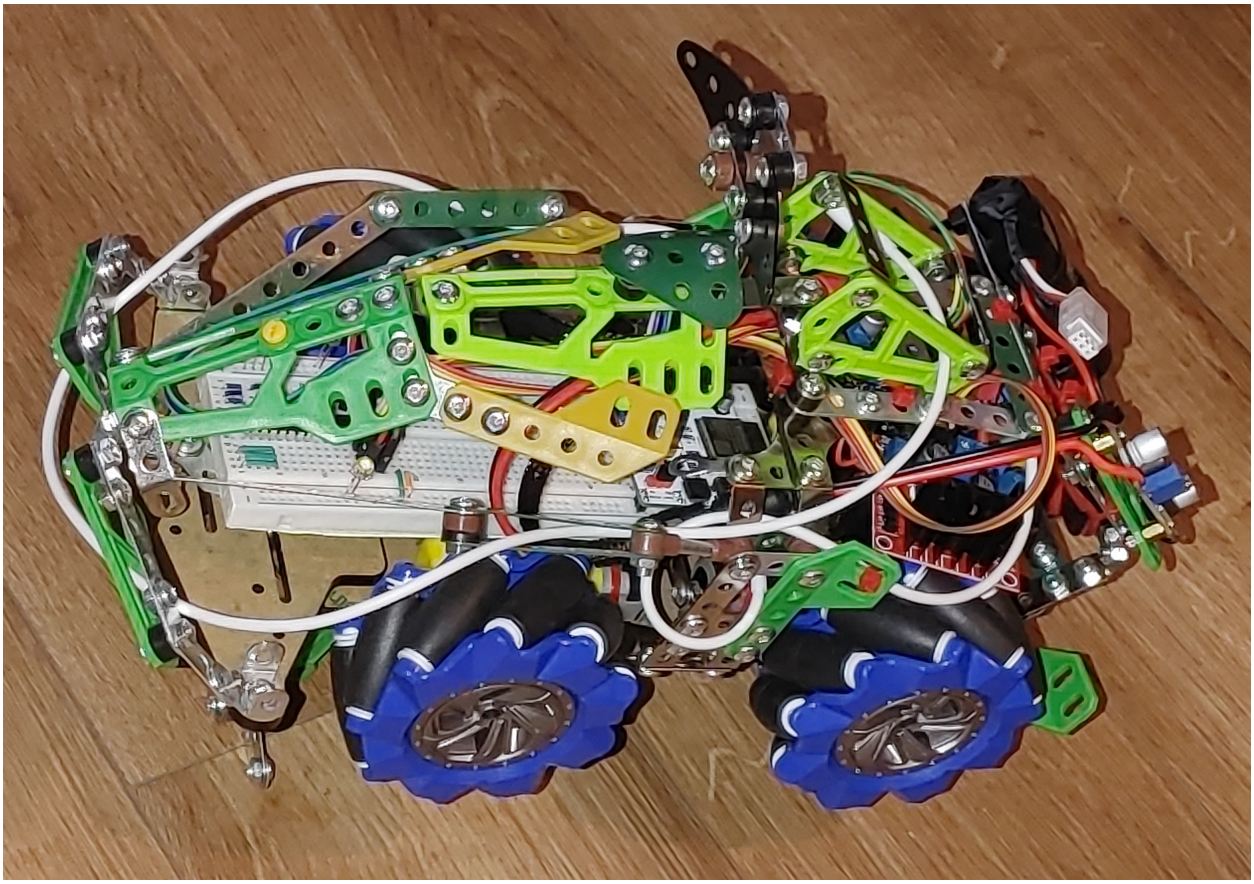

3.2 Chassis

3.3 Wiring

3.4 Motor Wires Harness

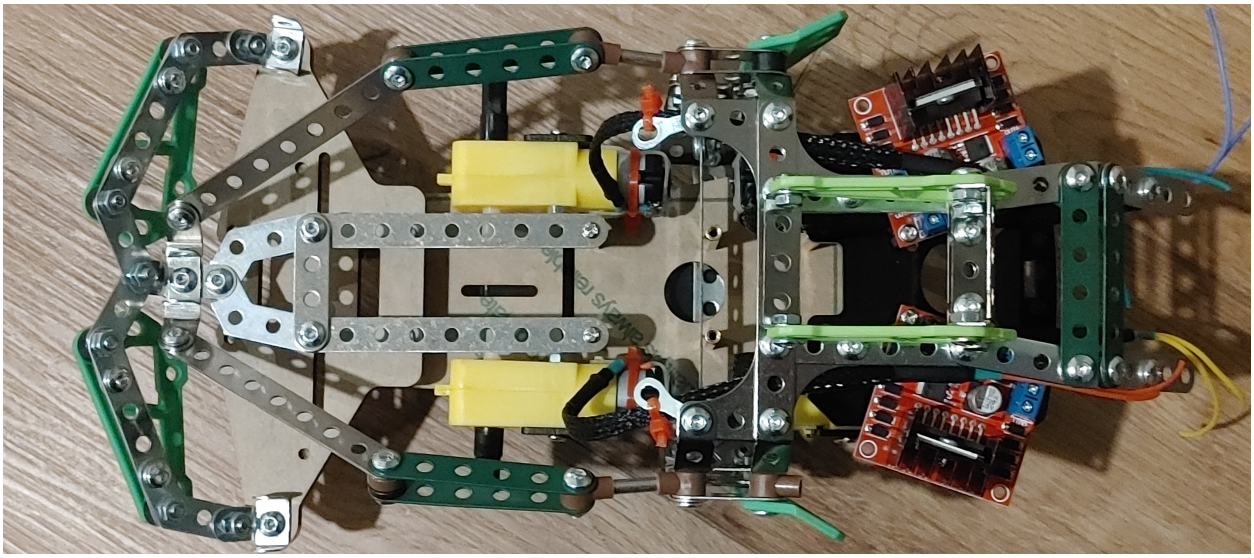

Fig. 1: Completed chassis with only DC motor controllers installed.

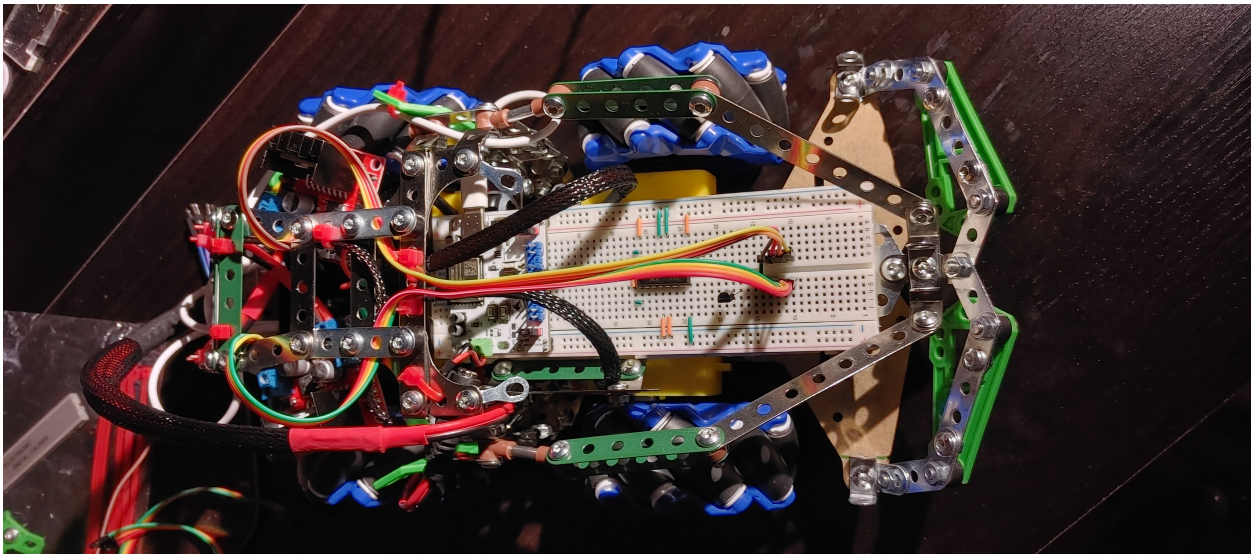

Fig. 2: Completed wiring.

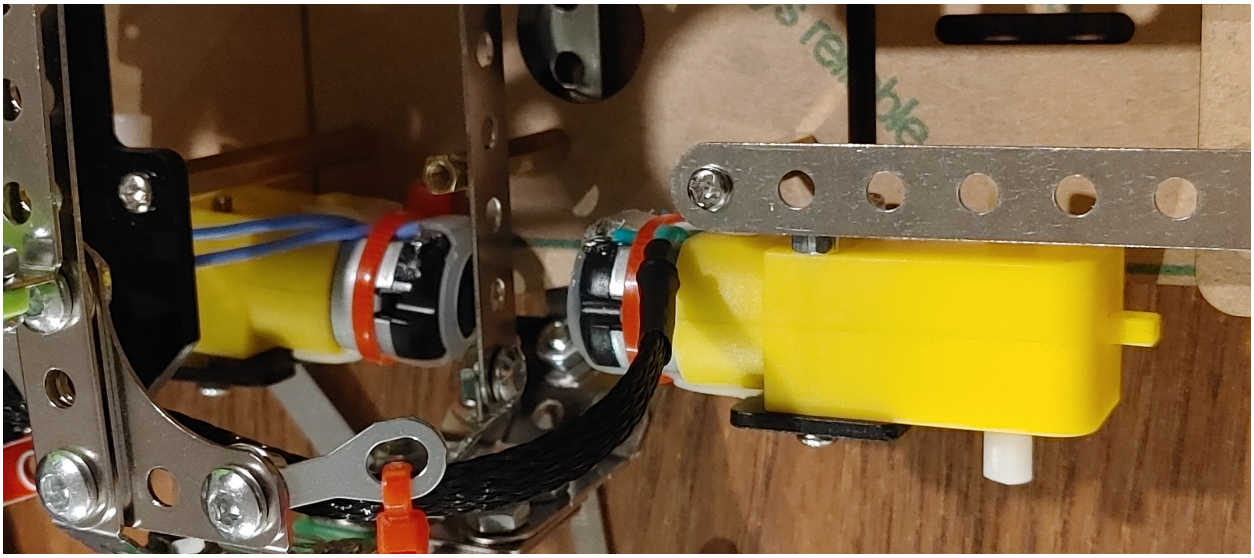

Fig. 3: DC Motors wires secured inside harnes.