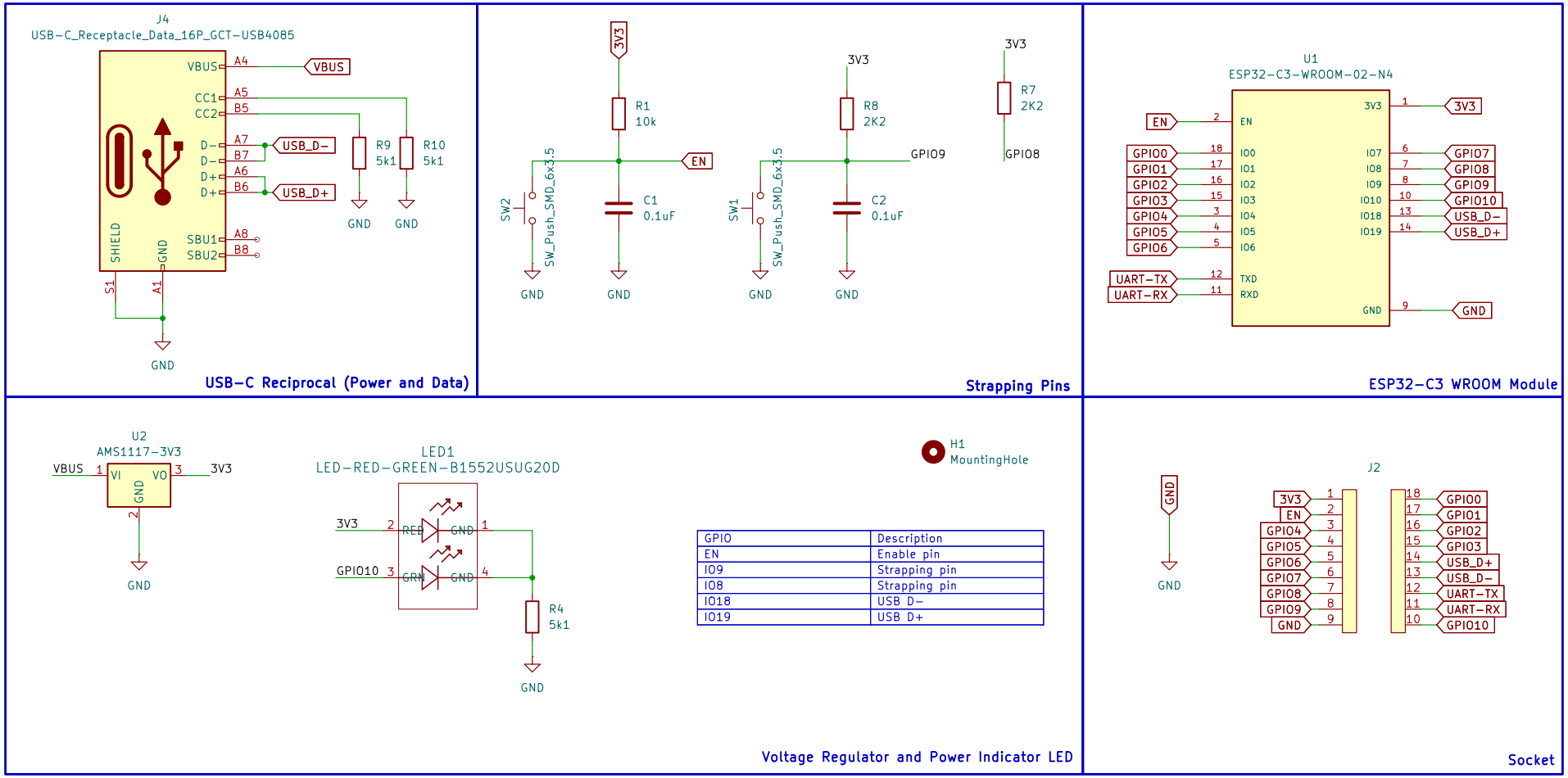

GPIO	Description
EN	Enable pin
IO9	Strapping pin
IO8	Strapping pin
IO18	USB D-
IO19	USB D+

Voltage Regulator and Power Indicator LED

Alexander Bobkov

Sheet: /

File: esp32-c3-wroom-socket.kicad_sch

Title: ESP32-C3 ZEN DevBoard

Size: USLetter	Date: 2025-06-09	Rev: 5.0
KiCad E.D.A. 9.0.2		Id: 1/1